AquiWave

Wireless Leak Alarm System

Product & Design Guide

Safeguard property and contents with a reliable and proven secure wireless system

aquilar
leak detection solutions

Looking After Assets

Museums & Galleries

Luxury Apartments & Houses

Historic Buildings

The Threat:

Water leaks can be costly but can also cause irrevocable damage to paintings or historic museum pieces. Fittings may fail on ageing plumbing systems or air conditioning equipment may develop problems. Expensive fixtures and fittings in apartments can be damaged.

The Solution:

AquiWave wireless leak detection can easily be fitted into areas without the need for cabling, giving flexibility for sensors to be easily repositioned as exhibitions change.

It can be retrofitted without causing any damage to existing infrastructure which normal wired systems may impose on.

Keep Things Working

Data Centre & Comms Rooms

Offices

Plant & Tank Rooms

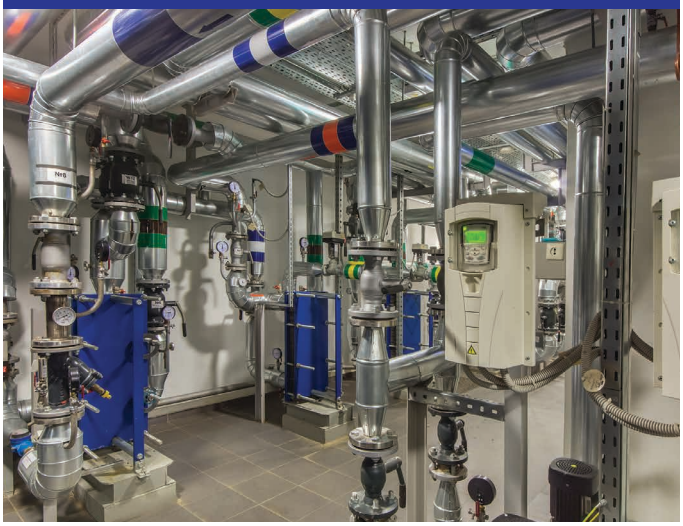

The Threat:

Water damage to property and equipment resulting in loss of revenue due to downtime and costly repairs.

The Solution:

AquiWave wireless leak detection can be quickly and easily fitted and interfaced with most environmental systems, providing full protection using its own standalone network. Does not interfere with incumbent systems.

Typical Applications

Kitchen & Utility Rooms

Sensors installed to cover leaks from washing machines, dishwashers, plumbed fridge/freezers, sinks etc.

Bathrooms & Toilets

Detect overflows from cisterns, bath/shower trays as well as leaks from associated hot and cold water or drainage pipes.

Plant Rooms & Tank Rooms

Detect leaks from plant equipment such as pump sets, boilers or water storage tanks.

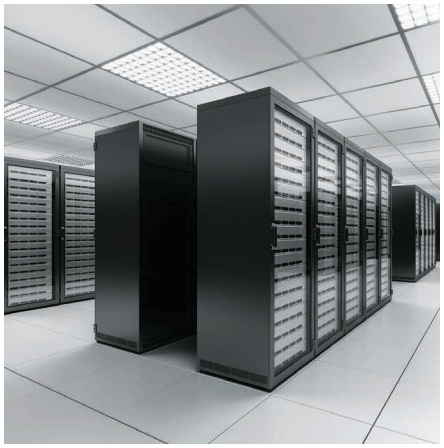

Data Centre & Comms Rooms

Detect leaks from air conditioning units and water pipes passing through, adjacent to or above sensitive areas.

Tea & Coffee Points, Water Coolers

Monitor leaks from sink pipework, vending machines and dishwashers etc.

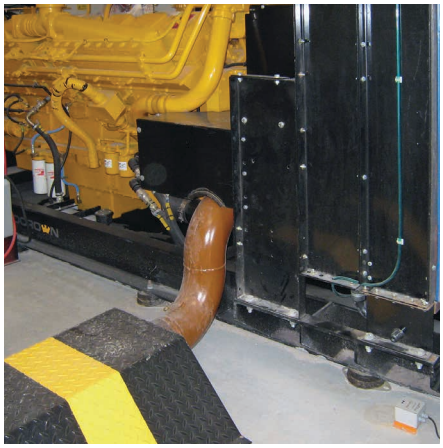

Diesel Generators & Day Tank Rooms

Hydrocarbon sensors can protect against leaks from generators, fuel pipework or storage tank failure.

The Right Time For AquiWave

When Is Wireless The Right Choice?

There will obviously be occasions when it's the only answer as running cables may be difficult – such as listed buildings where the infrastructure cannot be changed.

Wireless gives a 'flexible & adaptable' system. With minimal installation requirements, it can be easily installed with low impact to its environment and, if required, moved to meet changing coverage requirements with reduced building works.

AquiWave is a compact wireless leak detection system designed for use in commercial or residential premises to protect high-value assets.

Simply add devices to build the system required. The AquiWave system is suitable for installation in areas where traditional wired systems may not be suitable or where a wired installation would cause too much disruption. It is almost a completely wireless system with only the panel requiring wired connection to 230Vac.

AquiWave is a premium bespoke water and fuel leak detection solution available from stock. A wireless survey is strongly recommended to be carried out on all sites prior to the installation of a system. Please contact Aquilar for details.

The AquiWave system has been designed around proven Wireless Fire Alarm systems that complies with EN54 Part 25. Requires no specialist software for setting-up or programming.

It is simple to install and can easily be taken out and relocated making it ideal for temporary installations such as partly complete construction sites, apartments, galleries, museum and storage areas.

Why Choose A Wireless Water Leak Detection System?

- AquiWave offers a robust wireless Water* leak detection system
- Based on proven fire alarm technology which has been tested to rigorous standards, far exceeding standard Wi-Fi systems
- Reduced installation costs
- The wireless system creates its own mesh network – doesn't rely on, or interfere with, incumbent Wi-Fi systems
- Full real-time duplex communication between devices and panels for total monitoring of all functions, including battery life and two-way control
- Full real-time duplex communication (sensor and panel have two way communication for improved monitoring, control and communication)
- Wirelessly control valves, beacons, sounders etc.
- Expandable – up to 240 devices on a single system
- Battery back-up as standard. Retains full functionality

** fuels, oils and chemicals can also be detected*

System Components

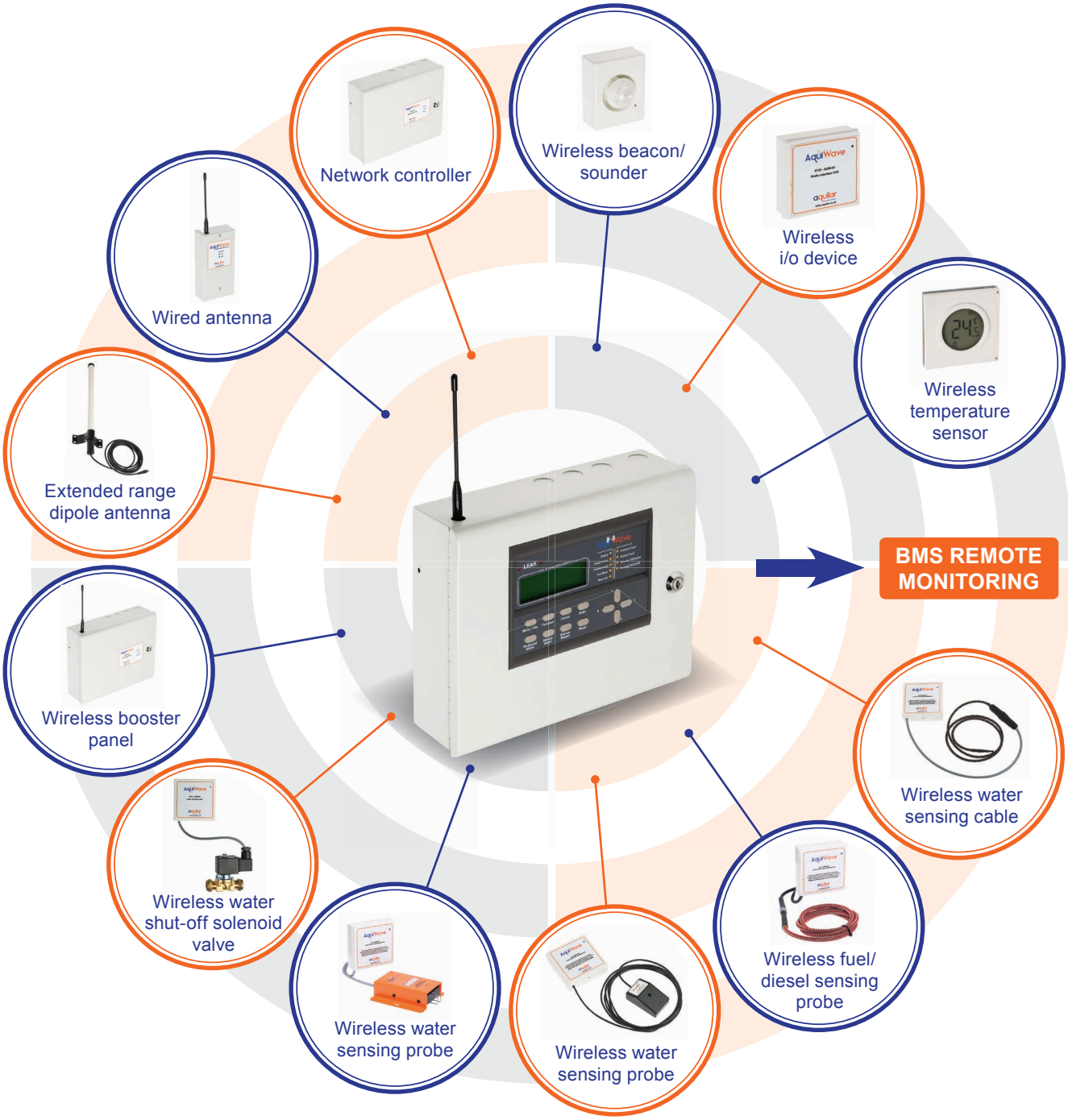

- Wide range of sensors to cover most applications
- Reduced cabling saves both labour and materials costs
- Easy to add or remove devices
- 255 areas and up to 240 devices can be connected on one system
- Four systems can be connected together to cover multiple areas or buildings

Technical Ordering Information

PANELS & TRANSMITTERS

AquiWave Wireless Control Panel

Code	Cat No.	Description
6700	AQW-RCP	AquiWave Wireless Control Panel, 240 devices, 230Vac
3700	AT-BAT	Replacement Battery 12 Vdc, 7Ah
6775	AQW-SA	AquiWave Replacement Stub Antenna

Fully addressable for 240 devices within 20 zones
Programmed via 12-button keypad, USB memory stick or QWERTY keyboard
Secure protocol with complex error checking
Battery backed-up for 72 hours' operation

AquiWave Wireless Booster Panel

Code	Cat No.	Description
6705	AQW-RBP-1	AquiWave Wireless Booster Panel, Up to 240 devices, 230Vac
6750	AQW-NCT	AquiWave Network Controller, for expanding network sub systems
6755	AQW-NCM	AquiWave Network Communicator, links network sub systems
3700	AT-BAT	Replacement Battery 12 Vdc, 7Ah

Wireless booster extends the wireless range of a system
Up to 7 boosters per system
Mains powered with battery back-up for 72 hours' operation

AquiWave Wired Intelligent Antenna

Code	Cat No.	Description
6740	AQW-IA	AquiWave Wired Intelligent Antenna, Up to 4 per AQW-RCP or AQW-RBP

Wired antenna extends the wireless range of a sym
Up to 4 wired intelligent antennas per panel or booster
Powered from the AquiWave central panel

Wireless Transmitter

Code	Cat No.	Description
6715	AQW-RTX	AquiWave Wireless Transmitter, c/w battery

Wireless transmitter for sensor connections
Up to 5-year battery life
Audible and visual local indication

Wireless Interface I/O Unit

Code	Cat No.	Description
6735	AQW-IO	AquiWave Interface i/o Unit DC
6736	AQW-IO-INT-230Vac	AquiWave 230Vac, 5A interface switch, for use with AQW-IO

Wireless i/o device with built in volt free relays for remote valve control
Audible and visual indication of operation
Can be assigned to specific sensing devices or areas of the building

WATER SENSING

Water sensing cable, complete with male connector

Code	Cat No.	Description
6600	AT-ECO-SC-1	EcoLeak Water Sensing Cable - 1m
6605	AT-ECO-SC-3	EcoLeak WaterSensing Cable - 3m
6610	AT-ECO-SC-5	EcoLeak WaterSensing Cable - 5m

Fast-drying and reusable water sensing cable with pre-fitted connector
Three fixed lengths available up to 5 metres
Uses fluoropolymer materials for long life

AquiWave Leader Cables

Code	Cat No.	Description
6045	AT-EL-LC-1	Aquitron EcoLeak Leader Cable - 1m
6050	AT-EL-LC-3	Aquitron EcoLeak Leader Cable - 3m
6055	AT-EL-LC-5	Aquitron EcoLeak Leader Cable - 5m
6060	AT-EL-LC-10	Aquitron EcoLeak Leader Cable - 10m
6065	AT-EL-LC-20	Aquitron EcoLeak Leader Cable - 20m

Modular leader cable with plastic connector used to connect the water sensing cable to the AQW-RTX
Five fixed lengths available up to 20 metres
LSZH rated cable

Mini Water Probe Sensor - 3m leader cable

Code	Cat No.	Description
4280	AT-MPS-R	EcoLeak Mini Water Probe Sensor - 3m leader cable

Cost-effective low point water sensing probe
Compact design for where space is limited

Technical Ordering Information

Water Detection Probe with Terminal Strips, Floor & Wall Mounting

Code	Cat No.	Description
3500	AT-PROBE-TS	Water Detection Probe with Terminal Strips, Floor & Wall Mounting

Special purpose low point water sensing probe
Up to 4 probes can be daisy-linked together
Floor or wall mounted suitable for many types of applications

TunDish Water Sensor

Code	Cat No.	Description
2436	AT-TDWS	TunDish Water Sensor

Point sensing probe to detect water within a Tundish
Clipped within a tank or vessel to detect water at a high point

WC Cistern Overflow Sensors

Code	Cat No.	Description
2431	AT-350A	WC Cistern Overflow - Standard WC top entry c/w spade connector

Fitted within a WC cistern to detect overflowing water level
Can be used with both plastic concealed or china cisterns

Drip Tray Water sensing Probe

Code	Cat No.	Description
4780	AT-DTP	Drip Tray Probe including Stainless Steel Bracket (2m lead)

Designed to hook over the side of a drip tray
Will detect water before it overflows

DIESEL & FUEL SENSING

Fuel (Diesel) sensing cable with pre-fitted connectors

Code	Cat No.	Description
2960	TT5000-1.5M/5FT-MC	Fuel sensing cable, 1.5 metre - with male/female connectors
2970	TT5000-3M/10FT-MC	Fuel sensing cable, 3 metres - with male/female connectors
2980	TT5000-4.5M/15FT-MC	Fuel sensing cable, 4.5 metres - with male/female connectors
6727	AQW-MLC-MC	Leader cable, 3.5 metre - Connecting Wireless Interface Unit to fuel sensing cable
6728	AQW-MET-MC	AquiWave Metal End Termination

Fuel sensing cable with pre-fitted metal connectors
Three fixed lengths available up to 4.5 metres
Special purpose AquiWave end termination

Optical Sensor Oil and Non Aggressive Chemicals (re-useable sensing)

Code	Cat No.	Description
3540	AT-OPSEN	Optical Sensor for oil and non aggressive liquids, 12 Vdc
3545	AT-OPSEN-RS	Optical Remote Sensor for oil and non aggressive liquids, c/w with 1mtr lead and 3/4" brass plug, 12 Vdc
3675	AT-PSU-12-1	Power Supply Unit for OPSEN, 230Vac to 12Vdc)
3690	AT-OPSEN-CBL	Cable for Optical Sensor (6 core cable - 50m reel)

Detects liquids within a few seconds
Multi-purpose optical sensor for diesel, engine oil, fuels, coolants and many other liquids
Quick to dry, clean and re-use

SUPPORTING PRODUCTS

Wireless Beacon snf Beacon/Sounder

Code	Cat No.	Description
6720	AQW-RS	AquiWave Wireless Sounder
6725	AQW-RB	AquiWave Wireless LED Beacon
6730	AQW-RBS	AquiWave Wireless LED Beacon/Sounder

Wireless sounder, beacon or sounder beacon with up to 5-year battery life
Can be assigned to specific devices or areas of the building
Adjustable volume up to 100dB

Electronic digital thermostat with LCD

Code	Cat No.	Description
6726	AQW-EDT	Electronic digital thermostat with LCD

Wall-mounted wireless digital thermostat with LCD and volt-free output to connect to a AQW-IO
Setting temperature range 5-30°C, operating temperature range 0-45°C
Uses standard AA batteries
Dimensions (mm) H84 x W84 x D35

Technical Ordering Information

AquiWave Dipole External Antenna

Code	Cat No.	Description
6745	AQW-EA	AquiWave Dipole External Antenna

High-gain antenna for improved wireless performance
For use with both the main control or booster panel
Allows decentralisation from the panels

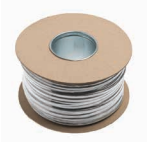

Jumper Cable, 2 core, 100m Reel (No Connectors)

Code	Cat No.	Description
6118	AT-BJC-2C	Jumper Cable, 2 core, 100m Reel (No Connectors)

2-core jumper cable without connectors to connect AT-PROBE-TS to the AQW-RTX wireless transmitter
LSOH 0.5mm^2, 2 numbered black cores. Max 300V

Water Shut Off Solenoid Valves

Code	Cat No.	Description
6300	AT-V-NC-15	15mm (1/2") Brass Solenoid Valve. Normally Closed. Manual Override. 230Vac
6301	AT-V-NC-22	22mm (3/4") Brass Solenoid Valve. Normally Closed. Manual Override. 230Vac
6302	AT-V-NC-28	28mm (1") Brass Solenoid Valve. Normally Closed. Manual Override. 230Vac
6303	AT-V-NC-35	35mm (1 1/4") Brass Solenoid Valve. Normally Closed. Manual Override. 230Vac
6304	AT-V-NC-42	42mm (1 1/2") Brass Solenoid Valve. Normally Closed. Manual Override. 230Vac

Brass bodied WRAS approved (certificate N. 1411048) pilot-operated diaphragm valve
Fail-safe normally closed 230Vac valves with manual release override

Water Sensing cable hold down clips

Code	Cat No.	Description
2610	TT-HDC-1/4	Hold Down Clips (adhesive backs) Water Sensing cable c/w glue - bag of 50
2620	TT-HDC-1/4-200-NA	Hold Down Clips (adhesive backs) Water Sensing cable c/w glue - bag of 200
2625	TT-HDC-1/4-100/TAG-25	Hold Down Clips (adhesive backs) c/w glue (100 pcs) Warning Tags (25 pcs)
2630	TT-HDC/TAG	Clips/Tags (15/5) - clips with adhesive backs (no glue)
3070	TT-HDC-1/2-NA-50	Hold Down Clips for Fuel Sensing cable c/w glue - bag of 50

Fixing clips to secure the sensing cable to the floor, drip tray or flat surface
1/4" for water sensing and 1/2" for the fuel sensing

USB keyboard for AQW-RCP set-up

Code	Cat No.	Description
6761	AQW-USBKB	AquiWave USB keyboard (for AQW-RCP set-up)

For AquiWave Wireless Control Panel set-up
USB Keyboard, compact & spill resistant

AquiWave Replacement Battery Pack

Code	Cat No.	Description
6770	AQW-BP	AquiWave Replacement Device Battery Pack

Replacement battery pack for all wireless devices
Up to 5 year battery life

AquiWave Survey Kit

Code	Cat No.	Description
6760	AQW-SK	AquiWave Survey Kit

Transmitter and receiver unit for testing wireless signal strength prior to installation

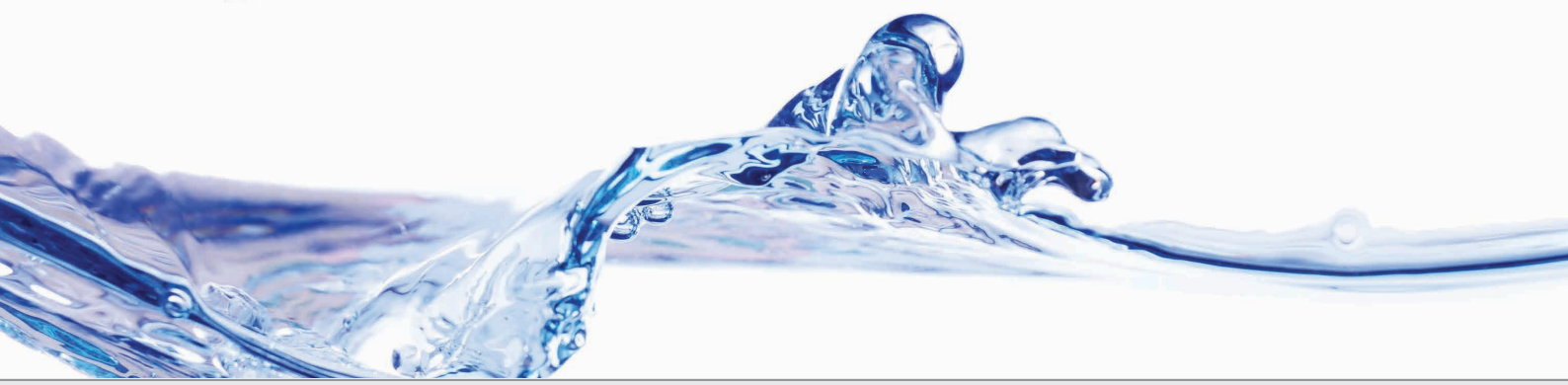

System Overview

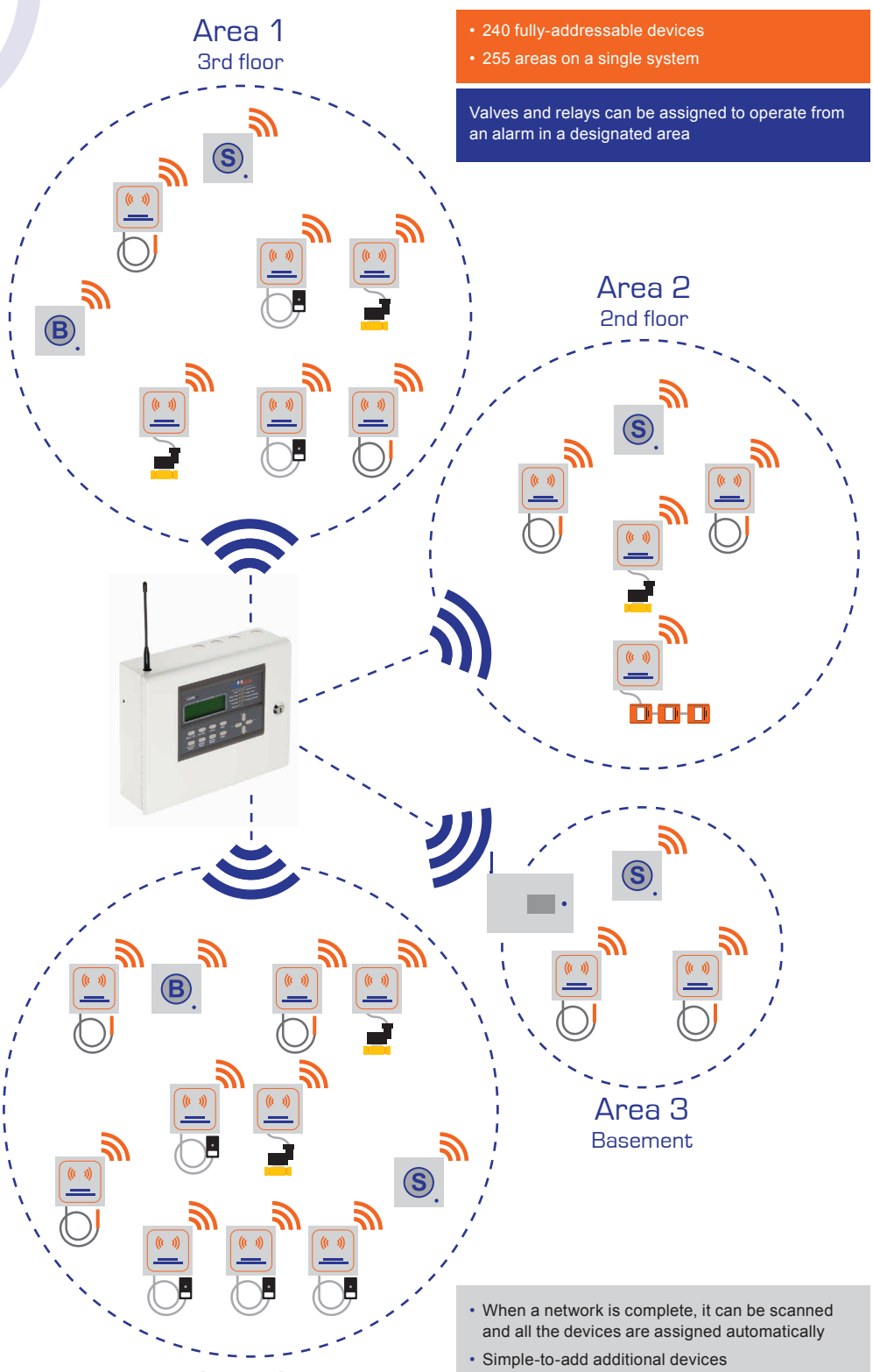

- 240 fully-addressable devices
- 255 areas on a single system

Valves and relays can be assigned to operate from an alarm in a designated area

- When a network is complete, it can be scanned and all the devices are assigned automatically
- Simple-to-add additional devices
- Each device has a unique address
- Multiple boosters can be added to increase the wireless network

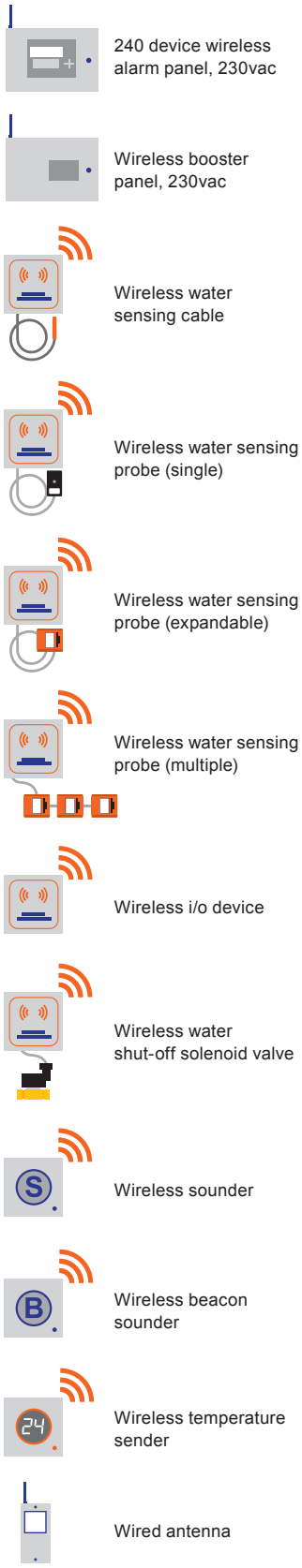

AquiWave Design

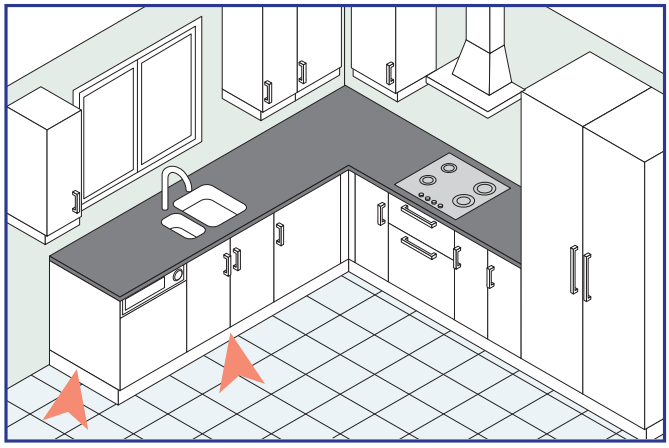

▲ Kitchen Leak Detection

Water sensing probe or sensing cable below the threshold strip or behind the dishwasher and sink, connected to a water shut-off solenoid valve.

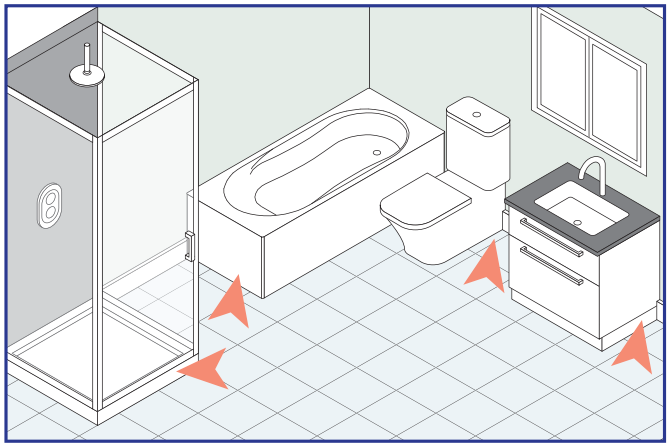

▲ Bath/Shower Room Leak Detection

Water sensing cable or probe below the bath, behind the toilet cistern and below the shower. Additionally probes fitted within the cistern to prevent water wastage.

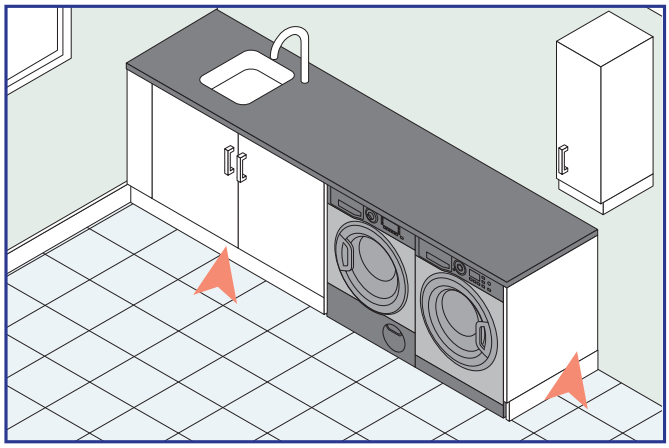

▲ Utility Room Leak Detection

Water sensing cable or probe below the sink and behind the washing machine, connected to a water shut-off solenoid valve.

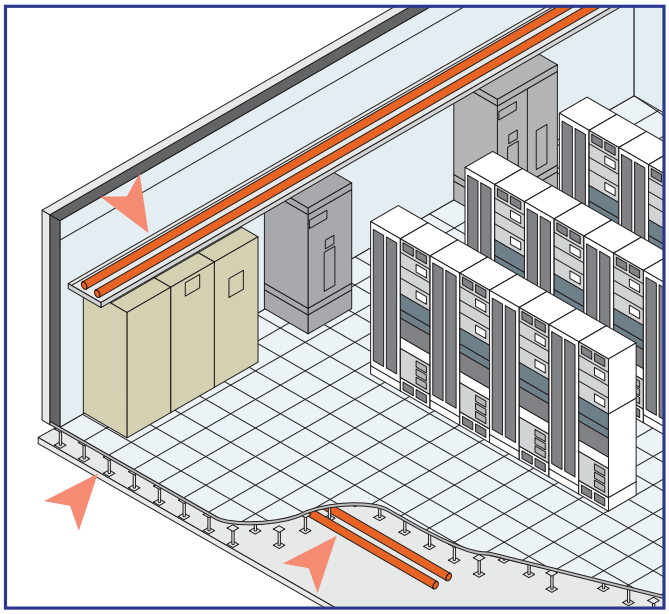

▲ Data Centre & Comms Rooms

Water sensing cable within the floor void and within drip trays or attached to pipes at high level.

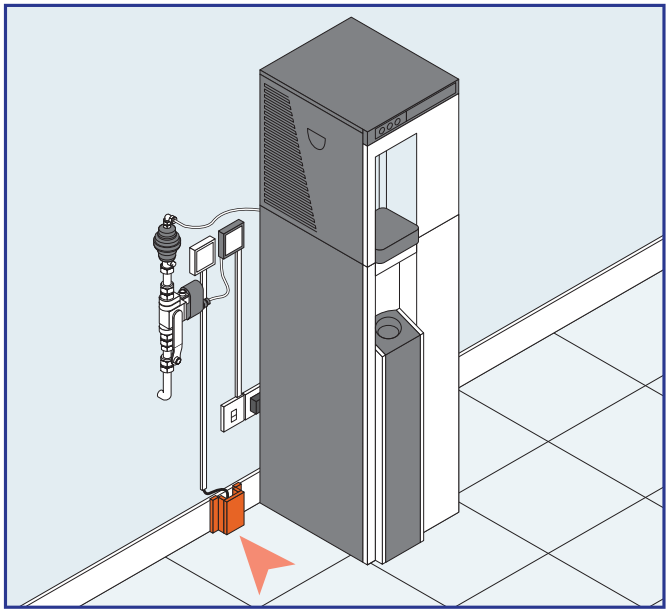

▲ Plumbed in Water Cooler

Water sensing probe connected to an isolating water shut-off solenoid valve.

aquilar
leak detection solutions

About Aquilar

Aquilar are a distributor and manufacturer of leak detection equipment providing solutions for detecting water, fuel, chemical and refrigerant gas leaks.

Aquilar Limited – providing world-leading systems for leak detection in critical industrial and commercial environments

Aquilar, founded in 2000, soon became the number one partner for the world leading TraceTek leak detection system, formally invented and manufactured by the Raychem Corporation.

Finding that one manufacturer did not offer a solution for all applications. Aquilar embarked on a customer focus program, speaking to many specifying engineers and customers to find out what other products were required. From this, development moved forward and a new range of brands were created including AquiWave, AquiTron, AquiNet and EcoLeak. R&D continues today with new products and solutions created to solve customers' challenges and to meet with new and changing standards within the building industry.

Aquilar prides itself on the level of service provided to its clients, offering step-by-step guidance, delivering the most effective solution for each project. A team of dedicated professionals can assist with design support, schematics, technical submittals, and quotations through to the delivery of the leak detection system along with product support required to complete the project to the highest standard.

Whilst Aquilar do not install leak detection directly, they do have a number of highly-trained partner installers around the country to ensure all systems are completed and maintained to the clients' specifications. Based in Broadbridge Heath, Horsham, West Sussex, Aquilar also benefits from ample warehouse space to keep good stock levels, providing off the shelf systems for the largest projects.

Aquilar has over 19 years' experience in design support and supplying leak detection systems into almost all market areas such as data centres, office buildings, banks, schools, hospitals, fuel storage facilities and laboratories. Aquilar have the right solution for all your leak detection needs.

Unit 30
Lawson Hunt Industrial Park
Broadbridge Heath
Horsham
RH12 3JR

+ 44 (0) 1403 216100
info@aquilar.co.uk
www.aquilar.co.uk

Can We Help You?

If you have a project that Aquilar can assist with, please call us on 01403 216100

©Aquilar 2019. 01/20 V2